MK04

COMPACT MOTORS

TECHNICAL CATALOG

POCLAIN Hydraulics

Methodology :
This document is intended for manufacturers of machines that incorporate Poclain Hydraulics products. It describes the technical characteristics of Poclain Hydraulics products and specifies installation conditions that will ensure optimum operation.
This document includes important comments concerning safety. They are indicated in the following way:

	Safety comment.

This document also includes essential operating instructions for the product and general information. These are indicated in the following way:

	Essential instructions.
	General information .
	Information on the model number.
	Weight of component without oil.
	Volume of oil.
	Units.
	Tightening torque.
	Screws.
	Information intended for Poclain-Hydraulics personnel.

The views in this document are created using metric standards.
The dimensional data is given in mm and in inches (inches are given in brackets in italic)

CONTENT

MODEL CODE **5**

CHARACTERISTICS **6**
Dimensions for standard 1-displacement motor 6
Load curves 7
Chassis mounting 8
Hydraulic connections 8
Immobilisator 9

OPTIONS **10**

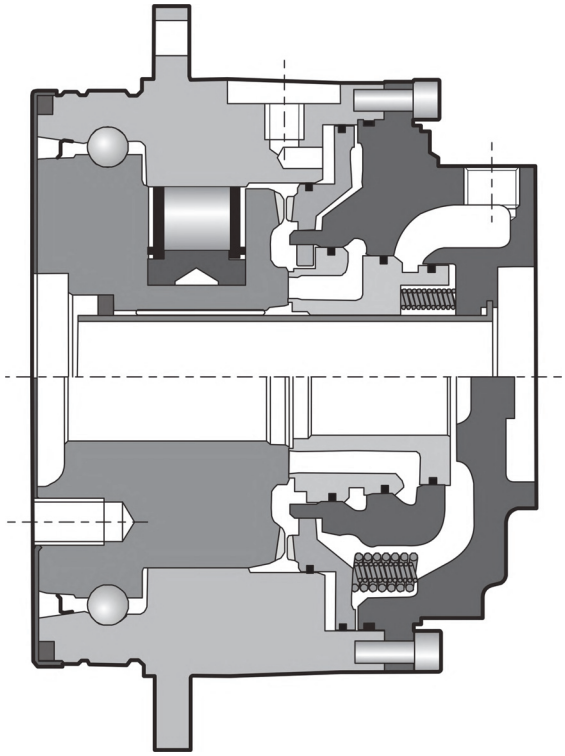

C	❶ cm³/rev *[cu.in/rev.]*	Theoretical torque ❶ at 100 bar Nm	at 1000 PSI *[lb.ft]*	Max.power ❶ kW *[HP]*	Max. speed ❶ rev/min	Max. pressure ❶ bar *[PSI]*
8	272 *[16,6]*	432	*[220]*	18 *[24]*	120	400 *[5 800]*
0	340 *[20,7]*	541	*[275]*		110	
2	408 *[24,9]*	649	*[330]*		100	

❶ **First displacement**

MODEL CODE

	C	D		F			P				S					
	1	1	2	3	1	2	3	1	2	3	4	1	2	3	4	5	6
C	M K 0 4		1	1						3	3	1	0					

❶

cm³/rev *[cu.in/rev.]*	
8	272 *[16,6]*
0	340 *[20,7]*
2	408 *[24,9]*

1-Displacement **1**

Without fixation **1**

ISO 9974-1 Connections **4**
ISO 11926-1 Connections **A**

Without immobilisator **A 0 4**
immobilisator **K 0 4**

3 Flange close to shaft

3 Short support

1 M threaded holes

A Hollow shaft
2 T4 Speed sensor installed
3 Mechanical brake release
8 Predisposition for speed sensor

CHARACTERISTICS

	C	D	F	P	S
	1	1 2 3	1 2 3	1 2 3 4	1 2 3 4 5 6
M K 0 4					

Dimensions for standard 1-displacement motor

	30 kg *[66 lb]*	31 kg *[68 lb]*
	0,35 L *[21 cu.in]*	0,35 L *[21 cu.in]*
	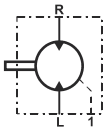	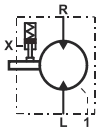

D		
1	1	

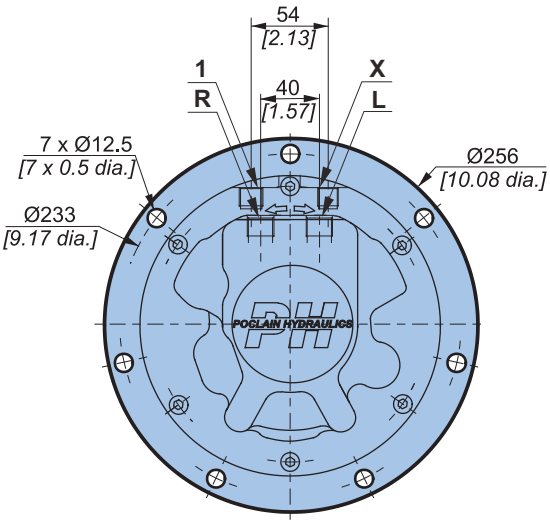

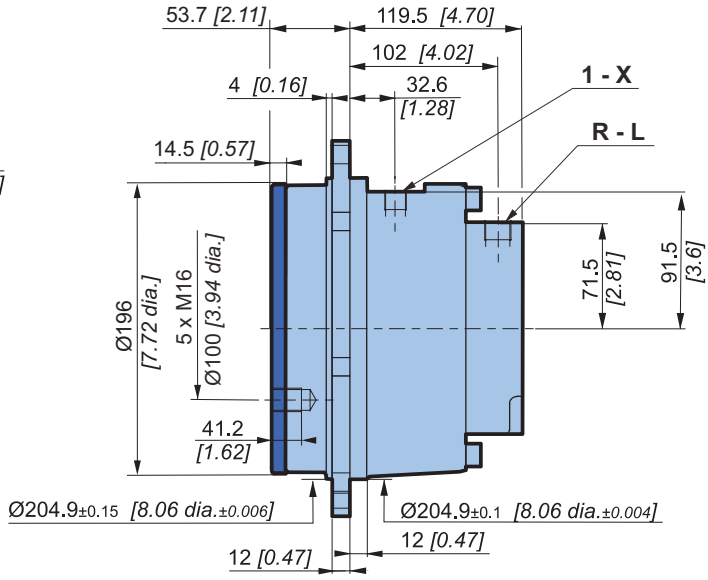

Rotating retaining screws

	Classe	N.m	*[lb.ft]*
5 x M16 x 2	12,9	355	*[262]*

(*) The tightening torques are given for the indicated loads.

Load curves

Permissible radial loads

Test conditions :

Static : 0 rev/min 0 bar *[0 PSI]*

Dynamic : 0 rev/min, code 2 displacement, without axial load at max. torque

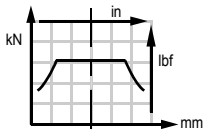

Service life of bearings

Test conditions :

L : Millions B10 revolutions at 150 bars (average pressure), with 25 cSt fluid, code 0 displacement, without axial load.

3	3	1	0
1	2	3	4
P			

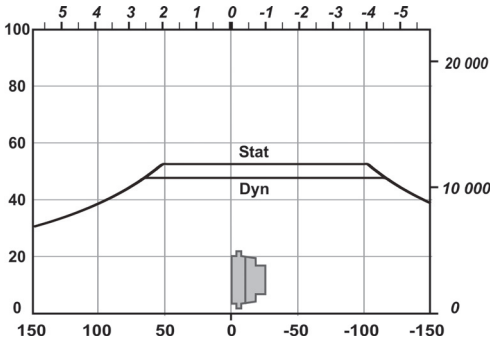

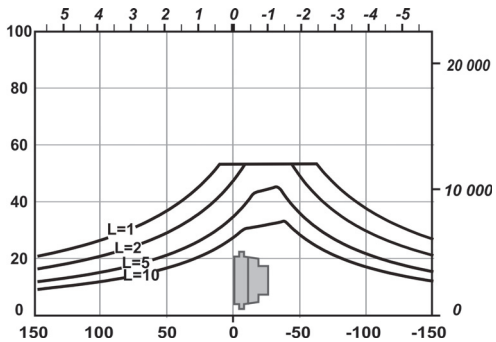

The service life of the components is influenced by the pressure.You must check that the combination of forces applied (Axial load / Radial load) is compatible with the permissible loads for the components, and that the resulting service lives of these components complies with the application's specifications. For an accurate calculation, consult your Poclain Hydraulics application engineer.

Load

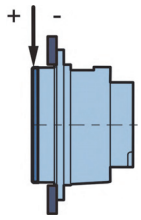

Efficiency

Overall efficiency

Average values given for guidance for code 2 displacement after 100 hours of operation with HV46 hydraulic fluid at 50°C *[122°F]*.

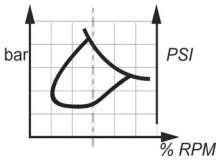

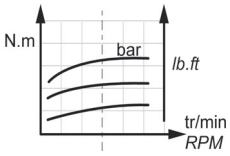

Actual output torque

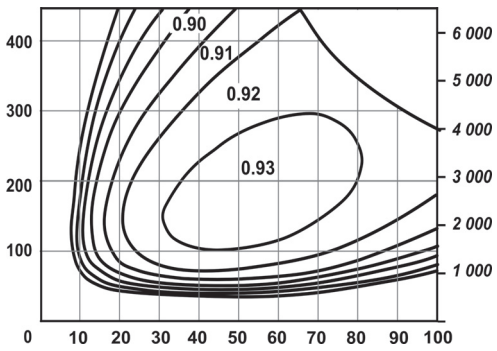

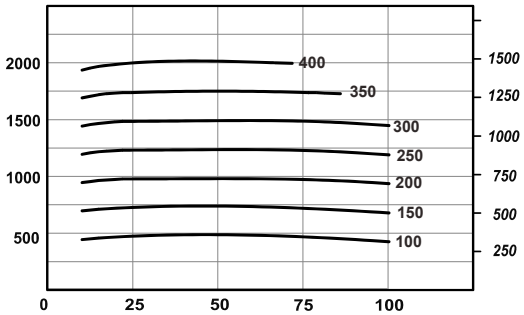

For a precise calculation, consult your Poclain Hydraulics application engineer.

Chassis mounting

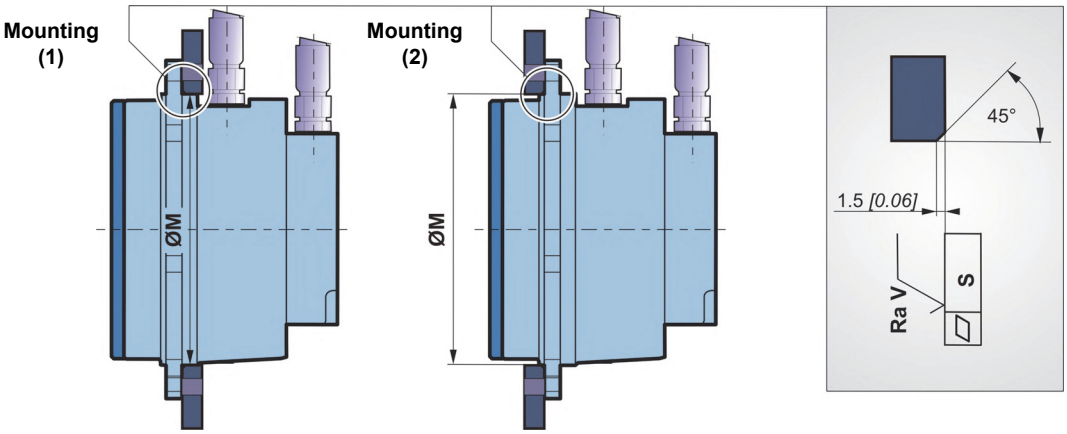

Take care over the immediate environment of the connections.

ØM (1)(2) mm *[in]*	S mm *[in]*	Ra V µm *[µin]*		Class of screw	N.m *[lb.ft]*
204,9 *[8,07]*	0,2 *[0,01]*	12,5 *[0,49]*	7 x M12 x1.75	12,9	145 *[107]*

(1) + 0.3 *[+0.012]*
+ 0.2 *[+0.008]*
(2) + 0.4 *[+0.016]*
+ 0.3 *[+0.012]*

Hydraulic connections

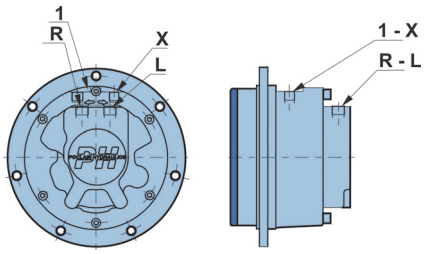

M	K	0	4																				
					1		1	2		1	2	3		1	2	3	4		1	2	3	4	5	6
					C		D			F				P					S					

	Old standards	Standards	Power supply R,L	Drainage 1	Control of brake X
A	SAEJ514	ISO 11 926-1	3/4" - 16 UNF	9/16" - 18 UNF	1/2" - 20 UNF
4	DIN 3 852 NFE 48 050	ISO 9 974-1	M22 x 1.5	M16 x 1.5	M14 x 1.5

Do not put either a check valve or a poppet valve on the pilot lines (parking brake and displacement change) between the charge pump and the pilot valve. Do not use a piloting valve with integrated check valve.

To find the connections' tightening torques, see the brochure "Installation guide" N° 801478197L.

You are strongly advised to use the fluids specified in brochure "Installation guide" N° 801478197L.

Immobilisator

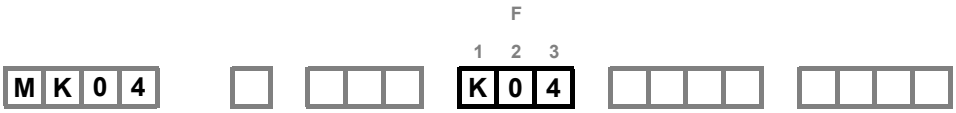

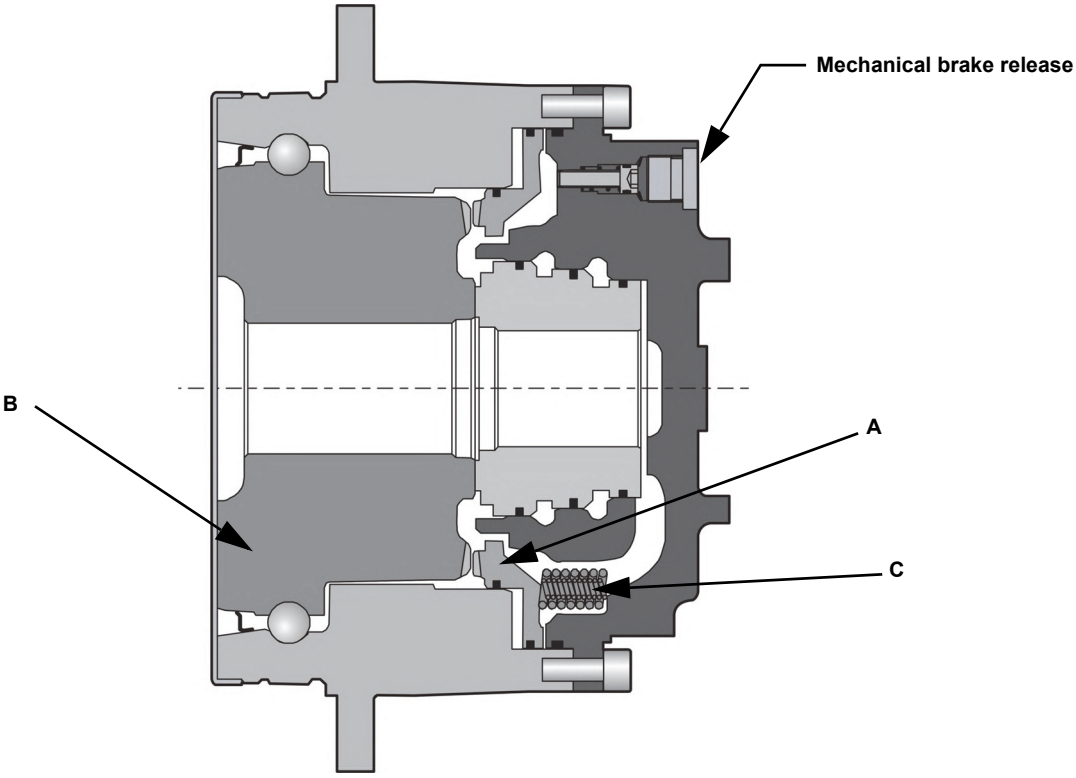

Principle:
This static brake consists of two toothed parts, one mobile (A), and the other fixed (B). When stationary, with no pressure, a spring (C) pushes the mobile part to mesh with the teeth of the cylinder block to immobilise it.

Parking brake torque with 0 bars in the housing (new brake)	3 170 Nm *[2 338 lb.ft]*
Minimum brake release pressure	17 bar *[246,6 PSI]*
Maximum brake release pressure	30 bar *[435,1 PSI]*
Capacity	23 cm³ *[1,4 cu.in]*
Brake release capacity	14 cm³ *[0,8 cu.in]*

OPTIONS

	C	D	F	P	S
	1	1 2 3	1 2 3	1 2 3 4	1 2 3 4 5 6
M K 0 4					

You can accumulate more than one optional part. Consult your Poclain Hydraulics sales engineer.

2 - 8 - Installed speed sensor or predisposition

Designation	C
T4 Speed sensor installed	2
Predisposition for speed sensor	8

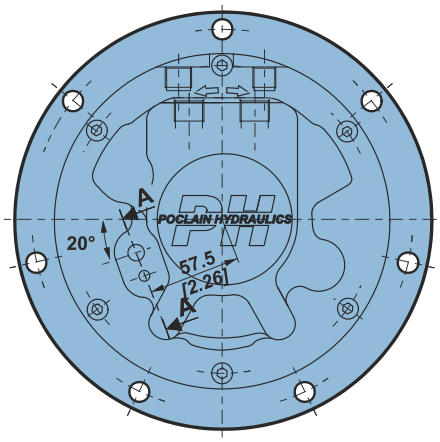

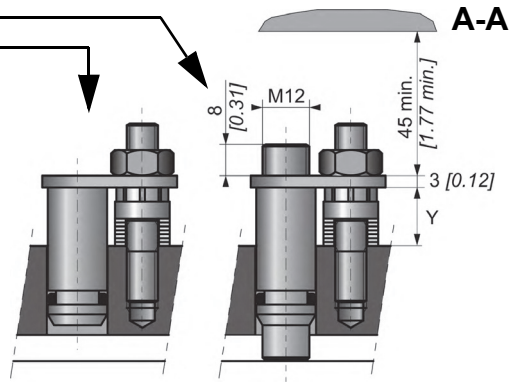

Max. length Y= 12.5

Standard number of pulses per revolution= 64

Look at the "Mobile Electronic" N° A01889D technical catalogue for the sensor specifications and its connection.

To install the sensor, see the "Installation guide" brochure No. 801478197L.

3 - Mechanical brake-release

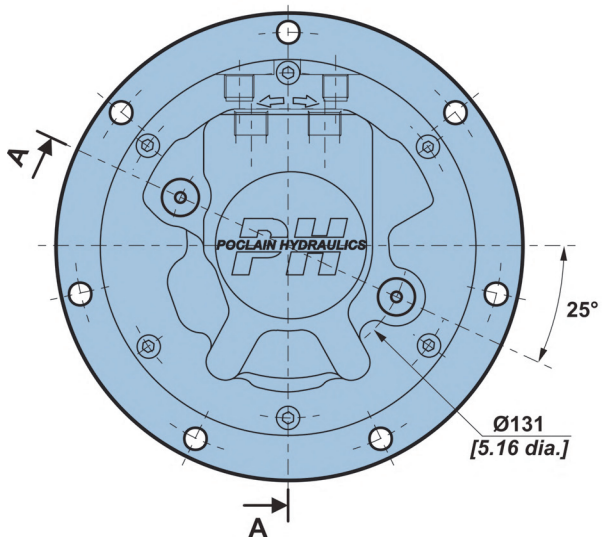

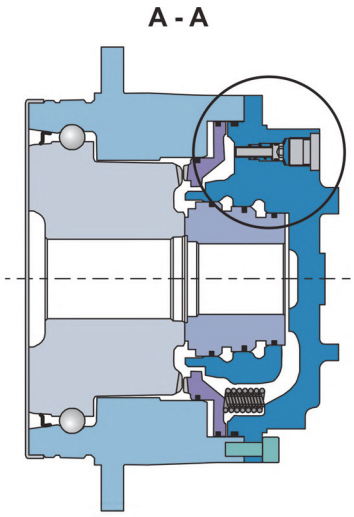

Refer to the "Installation guide" catalogue, N° 801478197L.

A - Hollow shaft

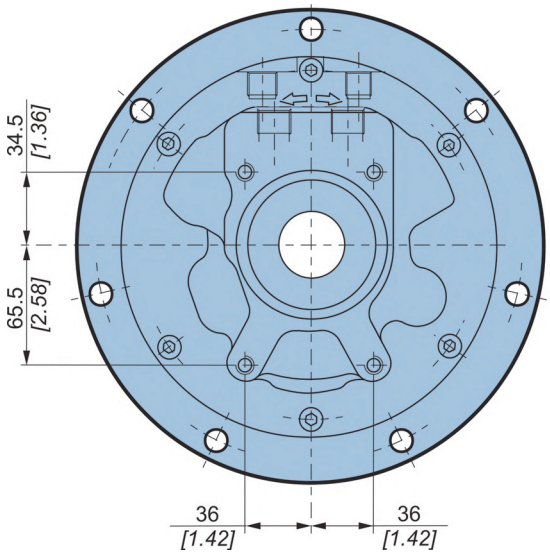

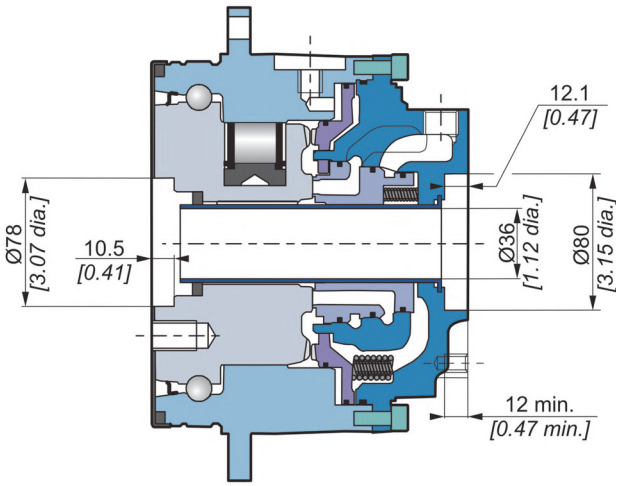

Mounting bolt for high speed motor

	Classe	N.m	[lb.ft]
4 x M8 x 1.25	10.9	295	[218]

(*) The tightening torques are given for the indicated loads.

Poclain Hydraulics reserves the right to make any modifications it deems necessary to the products described in this document without prior notification. The information contained in this document must be confirmed by Poclain Hydraulics before any order is submitted.
Illustrations are not binding.
The Poclain Hydraulics brand is the property of Poclain Hydraulics S.A.

04/02/2020
801 578 135P
801 578 146B
801 578 157N
801 578 168A
801 578 179M
A51812S

www.poclain-hydraulics.com